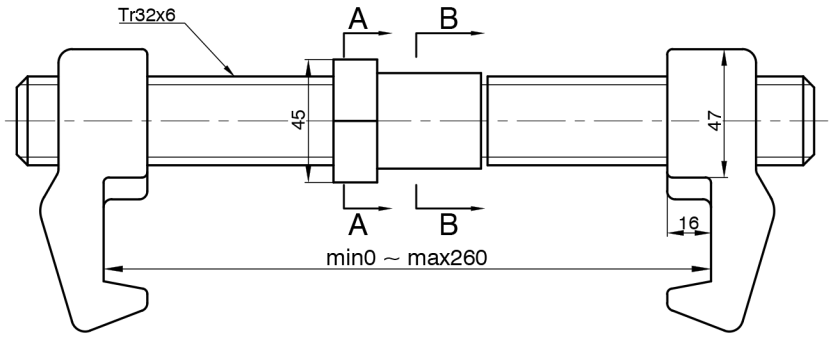

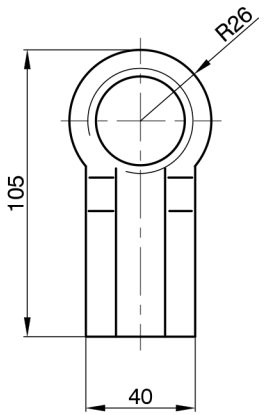

LOADS		TENSION[kN]
BREAKING LOAD	BL	100
PROOF LOAD	PL	63
SAVE WORKING LOAD	SWL	50

WEIGHT: 2,8 kg

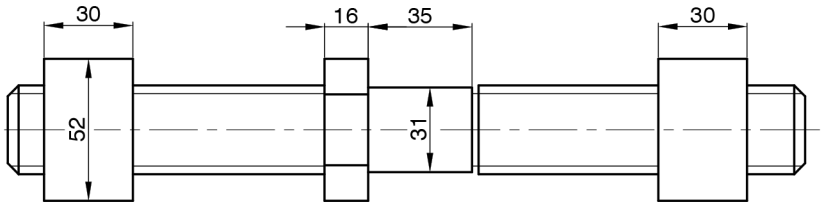

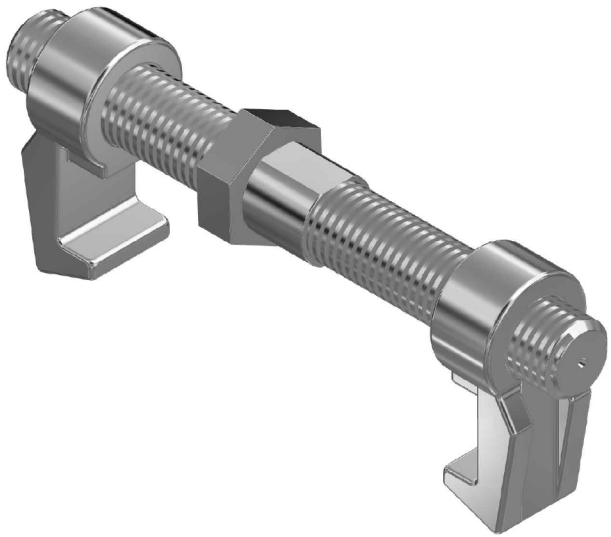

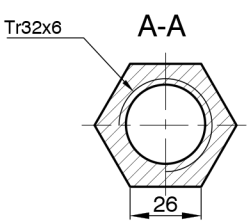

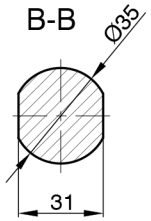

BRIDGE FITTING	SB-1S

NAVACQS SEAL SUPPLIERS B.V.

Albert Plesmanweg 107 A
3088 GC Rotterdam

+31(0)10-495 0000
sales@navacqs.nl
sales@navacqs.be